SHEET OF

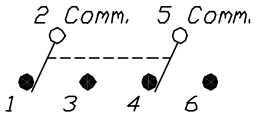

CIRCUIT: DPDT

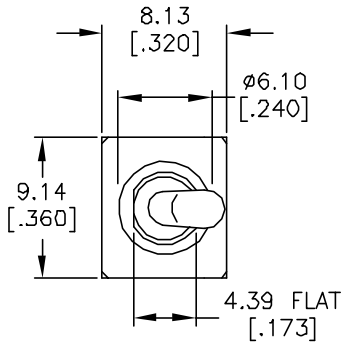

CONTACT CONFIGURATION

SWITCH FUNCTION		
POS. 1	POS. 2	POS. 3
ON	NONE	ON
2-3,5-6	OPEN	2-1,5-4

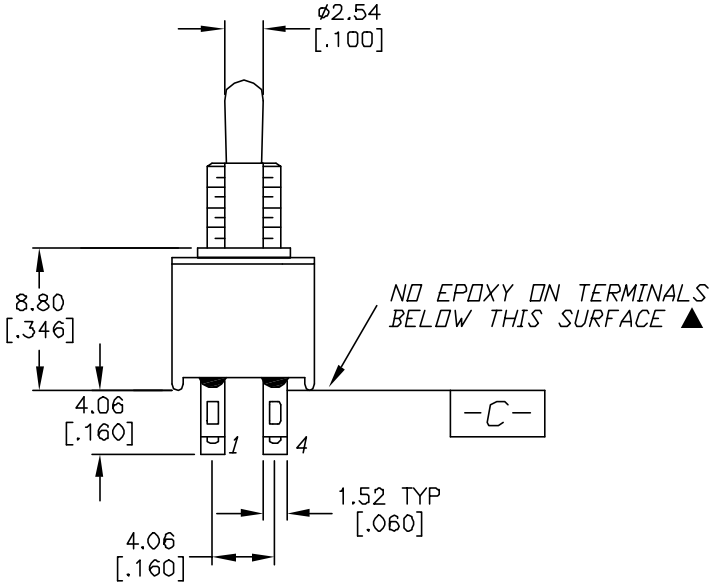

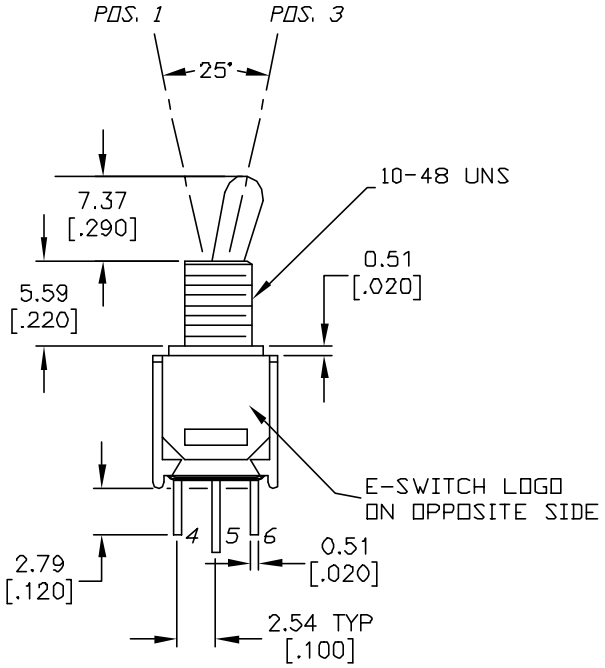

NOTES:

1. ALL DIMENSIONS IN MM [INCH]
2. GENERAL TOLERANCE: X.X=±0.4
   X.XX=±0.25
3. TERM. NOS. FOR REF. ONLY
4. RATING: 3A @ 120 VAC OR 28 VDC
   1A @ 250 VAC
5. MATERIAL: FIXED TERMINAL & MOVING CONTACT
   COPPER ALLOY W/ SILVER PLATE
6. CONTACT RESISTANCE: 20 MΩ MAX INITIAL
   @2-4VDC, 100mA for AG & AU
7. ELECTRICAL LIFE: 30,000 make-and-break
   cycles at full load.
8. INSULATION RESISTANCE: 1,000MΩ MIN.
9. DIELECTRIC STRENGTH: 1000V RMS @sea level
10. OPERATING TEMP.: -40°C to 85°C

REV.	ECN No.	DESCRIPTION	DATE	CHKD
A	11731	RELEASED FOR PRODUCTION	10/12/01	CJC

E-SWITCH®

TITLE 200 MDP1 T3 B1 M1 Q E

SCALE	DATE	DR	DWG	REV
2:1	10/12/01	CJB	T221033	A