SD-73251-094

MATERIALS AND FINISHES:
BODY STAINLESS STEEL
PASSIVATED

CENTER CONTACT BERYLLIUM COPPER
PLATED GOLD

INSULATOR TEFLON

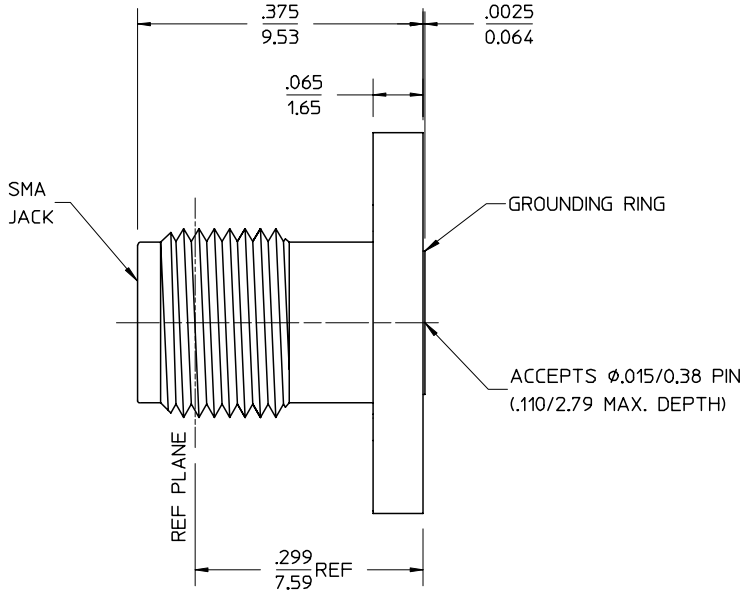

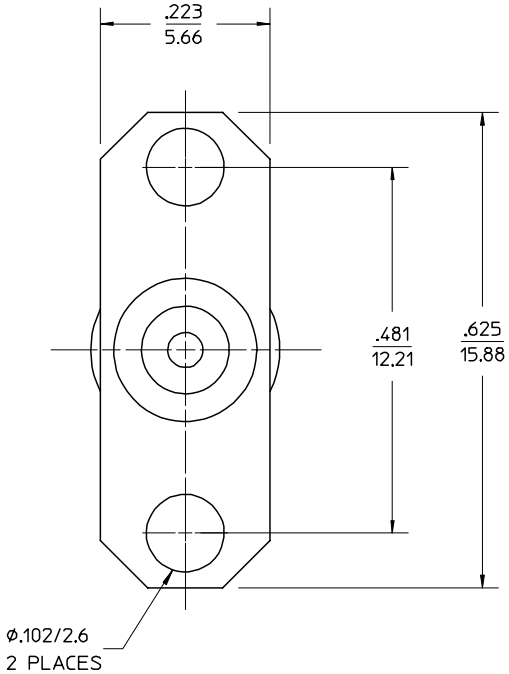

PART # 73251-0940

MIL-STD-348, FIGURE 310-2	INTERFACE
PS-89675-2910	ELECTRO/MECH PERFORMANCE
SPECIFICATION	DESCRIPTION

REV	DESCRIPTION
A	CHG: NEW RELEASE EC NO. URF-0233 DRWN: TEF 06/21/99 CHK: DHG 06/21/99 APPR: GMH 06/21/99

UNLESS OTHERWISE SPECIFIED DIMS ARE INCHES AND ANGLES ARE DEGREES.
1. ✓ 63 ALL OVER.
2. NO CHATTER OR NON-UNIFORM SURFACE FINISH ALLOWED.
3. PARTS TO BE FREE OF BURRS & SHARP EDGES .005 MAX BREAK.
4. EXTERNAL THREADS TO BE ROLLED OR SINGLE POINT.
5. DIAMETERS TO BE CONCENTRIC WITHIN .003 TIR.

QUALITY SYMBOLS
MAJOR =
CRITICAL (C) =

GENERAL TOLERANCES: (UNLESS SPECIFIED)

	mm	INCH
4 PLACES	± ——	± .0005
3 PLACES	± ——	± .005
2 PLACES	± ——	± .01
1 PLACE	± ——	± .1
ANGULAR: ±2°		

DRAFT WHERE APPLICABLE MUST REMAIN WITHIN DIMENSIONS

SCALE ——
DESIGN UNITS ☐ mm ☒ INCH
THIRD ANGLE PROJECTION
DIMENSIONS: ☐ mm/INCH ☒ INCH/mm ☐ mm ONLY

SHT	REV
1	A

REVISE ON CAD ONLY

DRAWN BY & DATE EDC 02/19/99
CHECKED BY & DATE DHG 02/19/99
APPROVED BY & DATE GMH 02/19/99
CAD FILENAME ——

TITLE:
SMA JACK, RECEPTACLE, 2 HOLE
FLANGE MOUNT, ACCEPTS .015 DIA PIN
SMA-JR/F

molex MOLEX INCORPORATED

MATERIAL NO. SEE NOTE
DRAWING NO. SD-73251-094
SHEET NO. 1 of 1

THIS DRAWING CONTAINS INFORMATION THAT IS PROPRIETARY TO MOLEX INCORPORATED AND SHOULD NOT BE USED WITHOUT WRITTEN PERMISSION.

SIZE B

UBORD.DGN REV A
96/06/12 LEVEL 4