NOTES:

1. MATERIALS AND FINISHES

   BODY - BRASS, GOLD PLATING
   CONTACT - BERYLLIUM COPPER, GOLD PLATING
   INSULATOR - PTFE, NATURAL

2. ELECTRICAL:

   A. IMPEDANCE: 50 OHM, NOMINAL
   B. FREQUENCY RANGE: DC-6 GHz
   C. VSWR (RETURN LOSS): 1.100 (-26.4 dB) MAX. @ 0-2.5 GHz
   D. D.W.V: 1000 VRMS, MIN.

3. MECHANICAL:

   A. DURABILITY: 500 CYCLES MIN.
   B. TEMPERATURE RANGE: -55°C TO +155°C

THIRD ANGLE PROJ.

REVISIONS				
REV	DESCRIPTION	DATE	ECO	APPR
B	RELEASE TO MFG.	20-Aug-14	2794	MZ

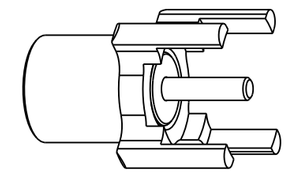

SCALE 4.000

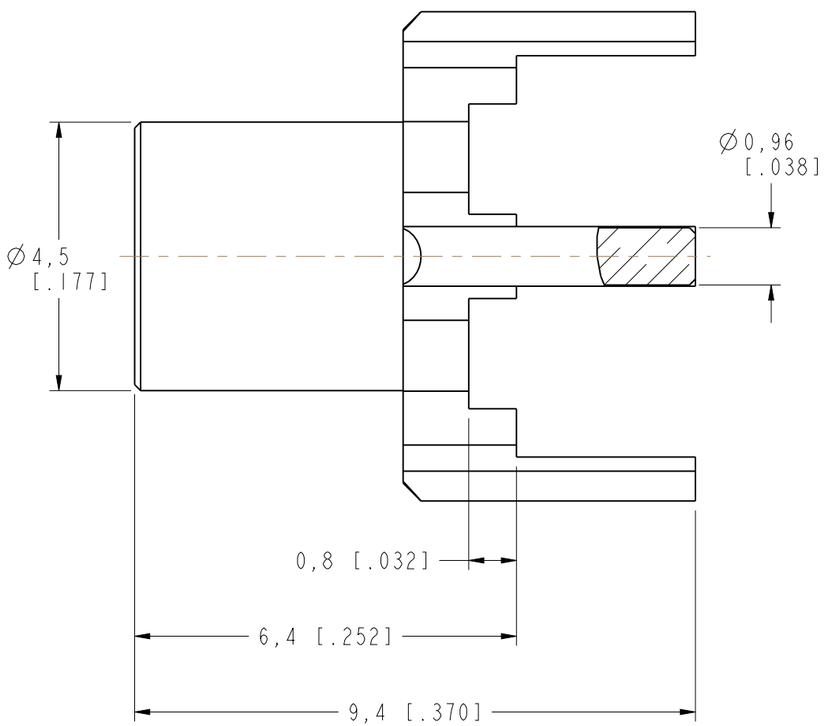

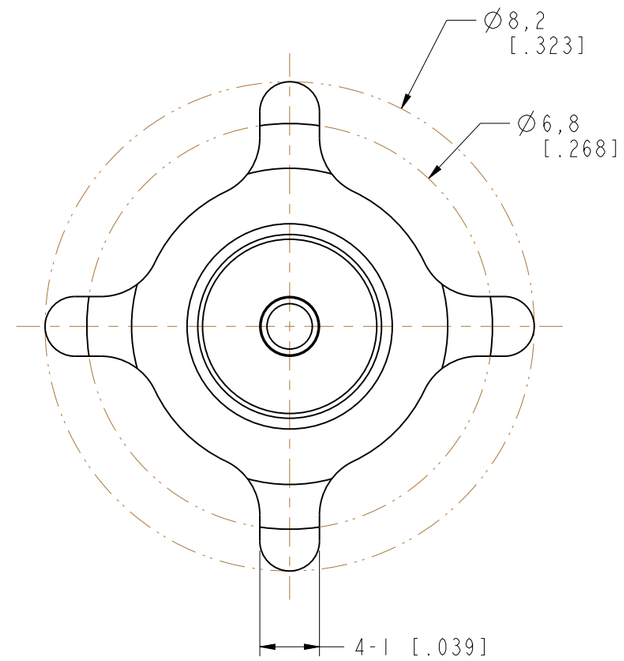

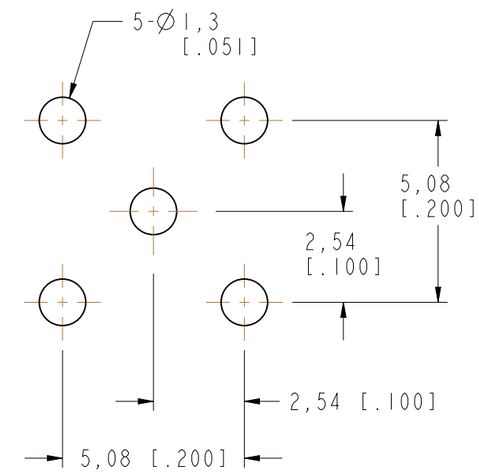

PCB MOUNTING HOLE

CUSTOMER OUTLINE DRAWING

ALL OTHER SHEETS ARE FOR INTERNAL USE ONLY

UNLESS OTHERWISE SPECIFIED, DIMENSIONS ARE IN METRIC AND TOLERANCES ARE:

<0.5mm	0.5 - 6mm	6 - 30mm	30 - 120mm	ANGLES
± 0.05mm	±0.1mm	±0.2mm	± 0.3mm	±1°

MATERIAL
-

REFERENCE
MCX6251A1-3GT30G-50

CONFIGURATION LEVEL: In Work

FINISH

DRAWN M.ZHANG	DATE 20-Aug-14	
ENGINEER S.HSEIH	DATE 15-Aug-14	
APPROVED S.HSIEH	DATE 20-Aug-14	
CAD FILE		

TITLE
MCX PCB MOUNT
RECEPT. JACK

SCALE: 10.0:1.0 | SHEET 3 OF 3

DWG SIZE B | REV B

Amphenol
Connex

DRAWING NO.
ITEM NO.
PART NO. 252219