Style
M12 Plug, shielded
4 pin
A-coding

Ratings
Voltage: 250 V
Current: 4 A

Operating Temperature Range
-40~105 °C

Materials
1. Insulator: Polyamide 66 (PA66), UL94 HB, black
2. Pin: C3604 brass, gold plated
3. Shell: C3604 brass, nickel plated
4. Nut: C3604 brass, nickel plated
5. O-ring: Nitrile rubber, black

Electrical Requirements
Dielectric strength: 1 min @ 500 Vac
Insulation resistance: 100 MΩ @ 500 Vdc
Contact resistance: 10 mΩ or less

Mechanical Requirements
Life cycle: 500 mating cycles minimum

Environmental Requirements
Salt spray test: 35 °C, relative humidity 90-95%, 5% NaCl mist for 48 hrs. Wash parts after test. Maintain mechanical requirements and a contact resistance of less than 10 mΩ.
Waterproof: IP67

Assembly Info
Wire gauge: 22 AWG max

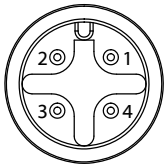

Front View
Not to Scale

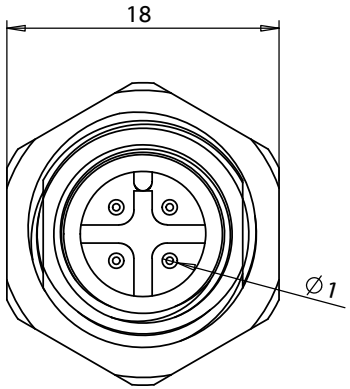

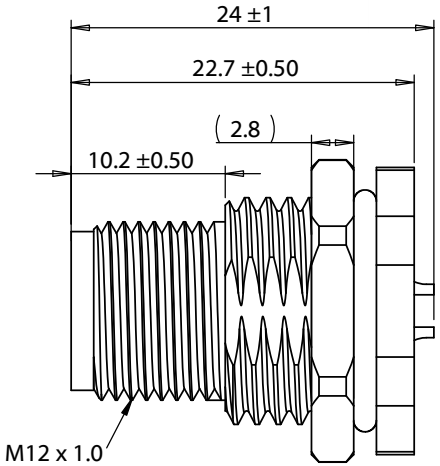

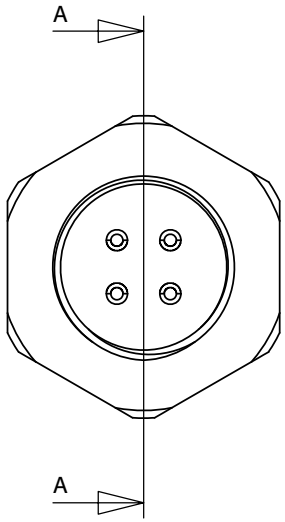

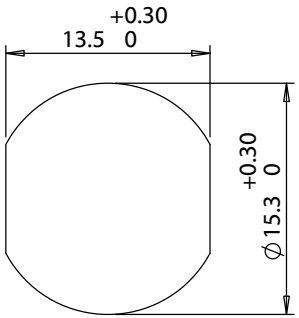

Panel cutout (PG9)
Panel thickness (5.0mm max.)

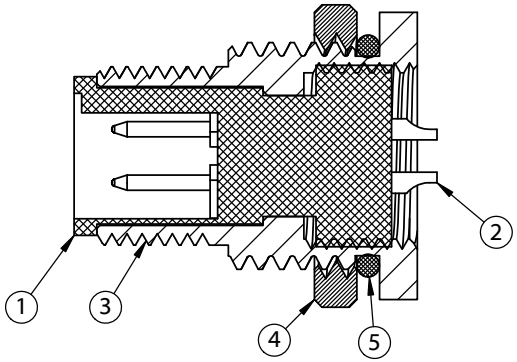

SECTION A-A

Revision:	Date:	Description:
A	10/2/2020	Initial release

Prepared:
JC — Digitally signed by JC Date: 2020.10.23 14:50:24 -07'00'

Verified:
AG — Digitally signed by AG Date: 2020.10.23 15:32:02 -07'00'

Dimensions are in millimeters.
Tolerances:
X: ± 0.3 mm
X.X: ± 0.1 mm
X.XX: ± 0.05 mm

Notes:
RoHS compliant

Function test: no open, no short circuit, no intermittent

Description:
Connector, 4 pin M12 A-code plug, 12xL24mm, gold plated, panel mount, solder cup, IP67

TENSILITY
tel 1.541.323.3228 800 877.670.7118
fax 1.541.323.4202 web tensility.com

Size: A
Part number: 54-00195
Scale: 2:1
Sheet 1 of 1

5 4 3 2 1